ATTACHMENT A

SITE CONTEXT MAP
"FRANCIS PLAZA"/TACO BELL
1124 ARNOLD DRIVE

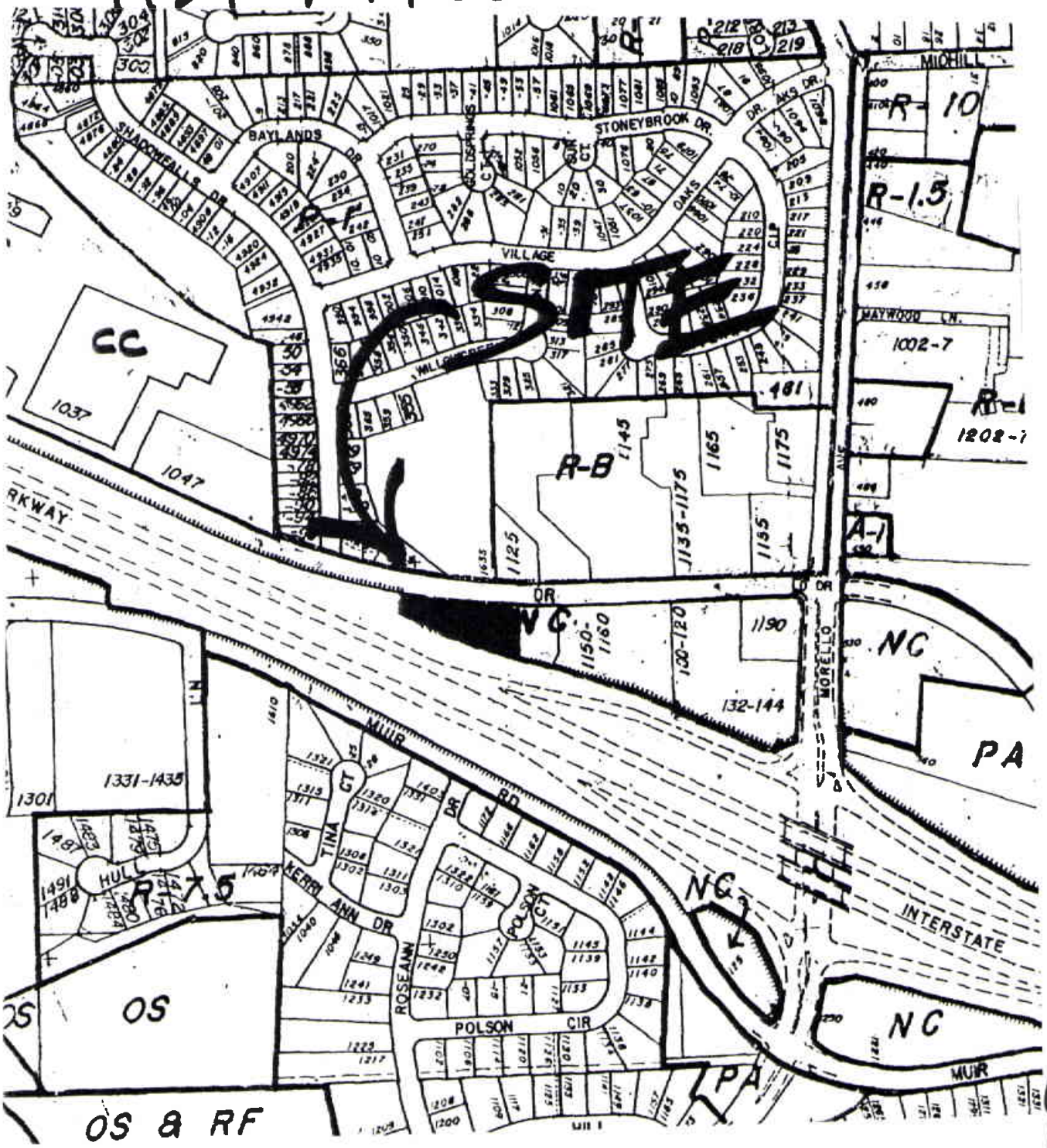

1/2

3D
60 yds
© 2006 Microsoft Corporation © 2005 Pictometry International Corp.
ial Earth™

SITE

2/2

ATTACHMENT B

approved
UP 06-13

Francis Property, Martinez

VICINITY MAP

Site

Ref
North

PROJECT SUMMARY

Ground Level Retail = 5,900 gross sf

Second Floor = 6,100 gross sf

Total Gross Building Area = 12,000 sf

Parking Required
2 full time Dentists = 10 cars(1 dentist/5 cars)
8,500 sf Retail = 43 cars (200sf/car)

53 cars required

57 cars provided

Site Area = +/-47,605 sf

PROJECT TEAM

Developer

Steve Francis
582 Center Ave,
Martinez, CA 94553

Civil Engineer

Lsh & Associates
738 Alfred Noble Drive
Hercules, CA 94547
510.724.3388

Architect

Johnson Lyman Architects
1375 Locust St., #202
Walnut Creek, CA 94596
925.930.9690
925.930.9039

Landscape Architect

Tom Baak & Assoc.
1620 No. Main, #4
Walnut Creek, CA 94596
925.933.2583

SHEET INDEX

A0 Cover Sheet
A1 Site Plan
L1 Landscape Plan
A2 Floor Plans
A3 Elevations
A4 Elevations
CB Color/Materials
C1 Preliminary Drainage Plan
C2 Preliminary Utility Plan
C3 Sections
C4 Existing Site Survey

RECEIVED
MAR 13 2007
COMMUNITY DEV. DEPT.

A0

1.15.07

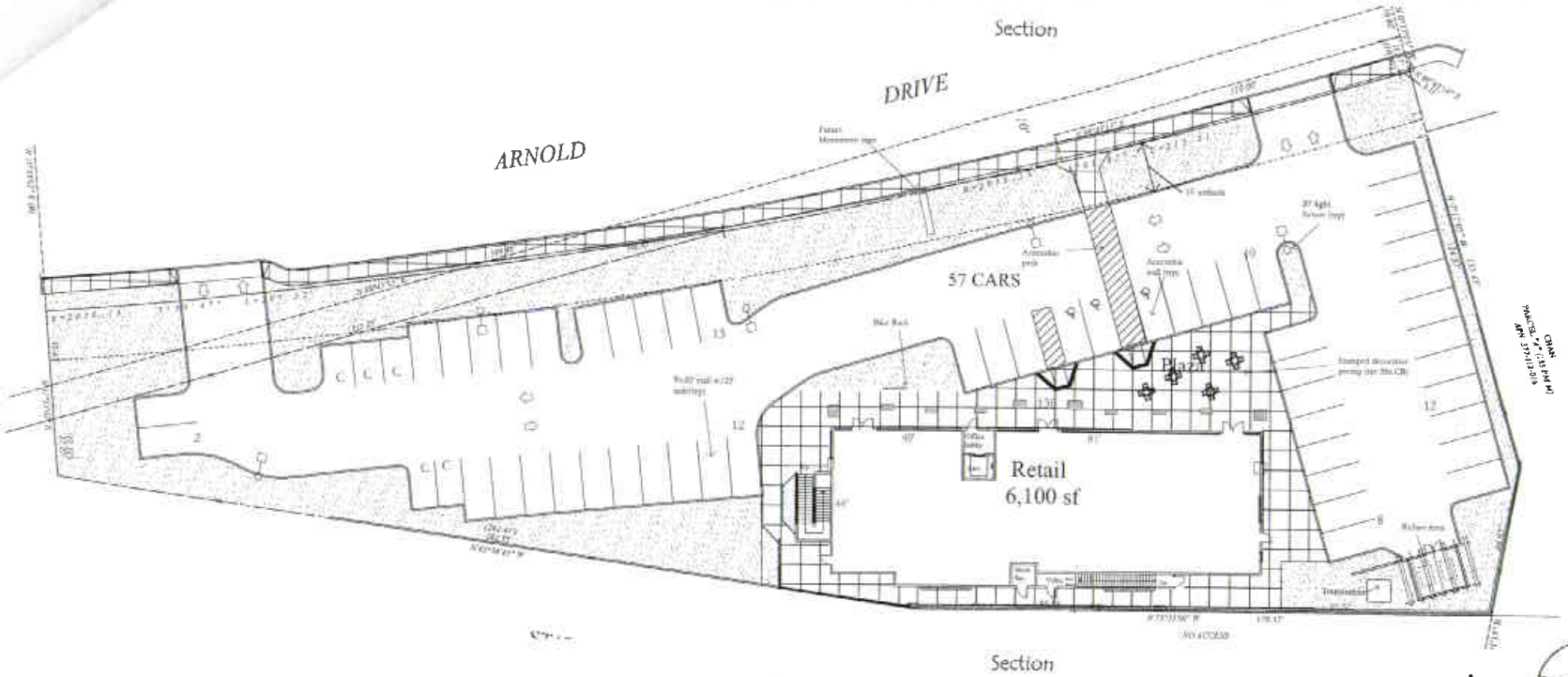

Site Plan

1" = 16'

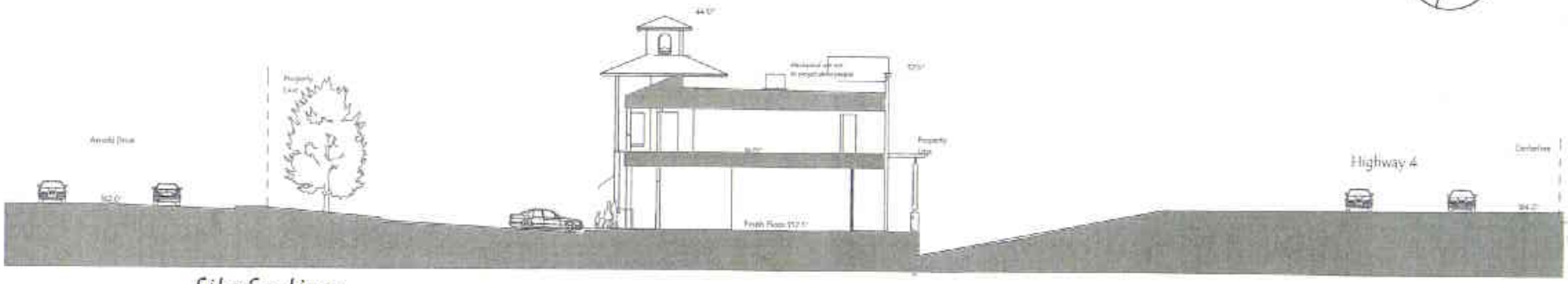

Site Section

1" = 10'

JOHNSON
LYMAN
ARCHITECTS
1379 Locust Street, #202, Walnut Creek, CA 94596
925.930.9690 925.930.9691 fax

Francis Property - Martinez

A1

1.15.07

57 cars provided

Walnut Creek, CA 94596

ATTACHMENT C

Abrams Associates
TRAFFIC ENGINEERING, INC.

August 16, 2012

RECEIVED
SEP 11 2012
COMMUNITY DEV. DEPT.

Steve Francis
582 Center Ave.
Martinez, CA 94553

Re: Review of Parking Conditions and Vehicle Queuing for the Proposed Commercial Project on Arnold Drive in the City of Martinez

In response to your request we have prepared a review of the parking supply and on-site vehicle queuing for the proposed commercial project on a site referred to as the "*Francis Property*" on Arnold Drive in the City of Martinez. The site is proposed to include 57 parking spaces for approximately 9,233 square feet of retail, restaurant, and office space. According to the City of Martinez Municipal Code (Sections 22.36.050) the proposed project would require 56 parking spaces. As discussed below, based on the City of Martinez Municipal Code and standard traffic engineering references on parking demand and queuing there should be no significant impacts on surrounding properties or to on-street parking or traffic operations in the area.

City of Martinez Zoning - The number of spaces required for this project by the City of Martinez Municipal Code is 5 spaces per every full-time doctor or dentist, one space per every 200 square feet for retail uses, and one space per every 100 feet (plus one space for every three employees) for restaurant uses. Table 1 summarizes the City's parking requirements for the proposed project. As seen in this table the project is required to provide 56 parking spaces and is proposing to provide 57 spaces.

Table 1
Parking Requirements for the Proposed Project

Parking Requirements	Size	Parking Demand
Medical Office (5 space per dentist)	3 dentists (3,615 square feet)	15 spaces
Retail Space (1 space per 200 sf)	3,378 square feet	17 spaces
Restaurants (1 space per 100 sf plus one for every three employees)	2,240 square feet (with a maximum of 6 employees on-site at any time)	24 spaces
Totals	***9,233 square feet***	***56 spaces***

1875 Olympic Boulevard, Suite 210 • Walnut Creek, CA 94596 • 925.945.0201 • Fax: 925.945.7966

Other References on Parking Generation – The Institute of Transportation Engineers (ITE) Parking Generation Manual provides detailed data on the peak parking requirements for various land uses based on surveys of conducted throughout the U.S. and Canada.[1] This reference provides information on the overall average parking demand for a variety of land uses. The parking demand of the various uses was estimated using the following ITE categories: Dentist's Office – *Medical-Dental Office Building* (Land Use Code 720), Retail Space – *Shopping Center* (Land Use Code 820), and Taco Bell – *Fast Food Restaurant with Drive-Through Window* (Land Use Code 934). The resulting calculations are shown in Table 2. As seen in Table 2, the average peak parking demand for the project is estimated to be 47 parking spaces which should be adequately accommodated by the proposed 57 off-street parking spaces. Please note that these calculations do not include any reductions for shared parking between the various uses.

Table 2
ITE Parking Demand Calculations for the Proposed Project

ITE Parking Demand	Size	Parking Demand
Medical Office (3.20 parking spaces per 1,000 sf)	3,615 square feet	12 spaces
Retail Space (3.96 parking spaces per 1,000 sf)	3,378 square feet	13 spaces
Fast Food Restaurant (9.98 parking spaces per 1,000 sf)	2,240 square feet	22 spaces
Totals	***9,233 square feet***	***47 spaces***

Queuing at the Proposed Drive-Through Window – There are no standard traffic engineering references that provide data on queuing at fast food drive through windows. For many years the primary source of data on this was a study conducted by the ITE technical council that was published in the ITE Journal (this report is included in the attached document).[2] This document specified a 95% probability that the maximum queue at a drive- through restaurant would be 10 vehicles or less. This report also specified that the maximum queue recorded at a Mexican food restaurant was 7 vehicles.

There is now a more recent study of drive through queuing that is based on fourteen days of

[1] *Parking Generation, 4th Edition*, Institute of Transportation Engineers, Washington D.C., 2010.
[2] *Queuing Areas for Drive Through Facilities*, ITE Technical Council Committee 5D-10, ITE Journal, Washington D.C., May, 1995.

drive-through surveys at six different drive through restaurants (including a Taco Bell).[3] The results of the surveys found that the average maximum queue was 8 vehicles with a maximum design queue of 12 vehicles. The maximum queue recorded at the Taco Bell that was surveyed was 10 vehicles (which occurred during the lunch hour).

For vehicle queuing estimates it is common traffic engineering practice to estimate vehicle queuing as 20 feet per vehicle (please note the average vehicle is typically no more than about 18 feet long). Based on the maximum reported queue of 10 vehicles recorded at a Taco Bell approximately 200 feet of storage would be required to accommodate the maximum queue. Based on our preliminary calculations the site plan would allow for approximately 6 to 7 vehicles within the drive-through lane and room for about 3 to 4 additional vehicles without interfering with internal circulation or access to any of the parking spaces on the site.

It is important to note that even if we assume the maximum design queue of 12 cars that is recommended for fast food drive throughs in general (including all types of drive throughs) the additional queuing should not result in any problems for vehicle circulation on the site (i.e. blocking drive aisles). The only effect that would be expected if the queue were to exceed 12 vehicles is that it could make the four (4) spaces located on the east side of the office/retail building difficult to access during peak times. This should not be a significant problem and could be addressed by designating these spaces as employee spaces if that became necessary. In summary, the proposed site plan should have more than adequate space for queuing and there is no reason to believe queuing will cause internal circulation problems or traffic to back up out of the site on to Arnold Drive.

Recommendations – Based on our review of the proposed parking supply the City of Martinez should be able to make the findings to approve the proposed site plan for this property based on the City's Municipal Code as well as the standard references available on parking generation and drive through queuing.

With the proposed design for vehicle queuing and the 57 parking spaces provided on the site there should be no significant impacts on surrounding properties or to on-street parking in the area (which is prohibited on Arnold Drive in the immediate vicinity of the project).

Please don't hesitate to contact me if you have any questions.

Sincerely,

Stephen Abrams

Stephen C. Abrams
President, Abrams Associates
T.E. License No. 1852

---

[3] *Drive-Through Queue Generation*, Mike Spack, PE, PTOE, Max Moreland, EIT, Lindsay de Leeuw, Nate Hood, Countingcars.com, Minneapolis, MN, February 2012.

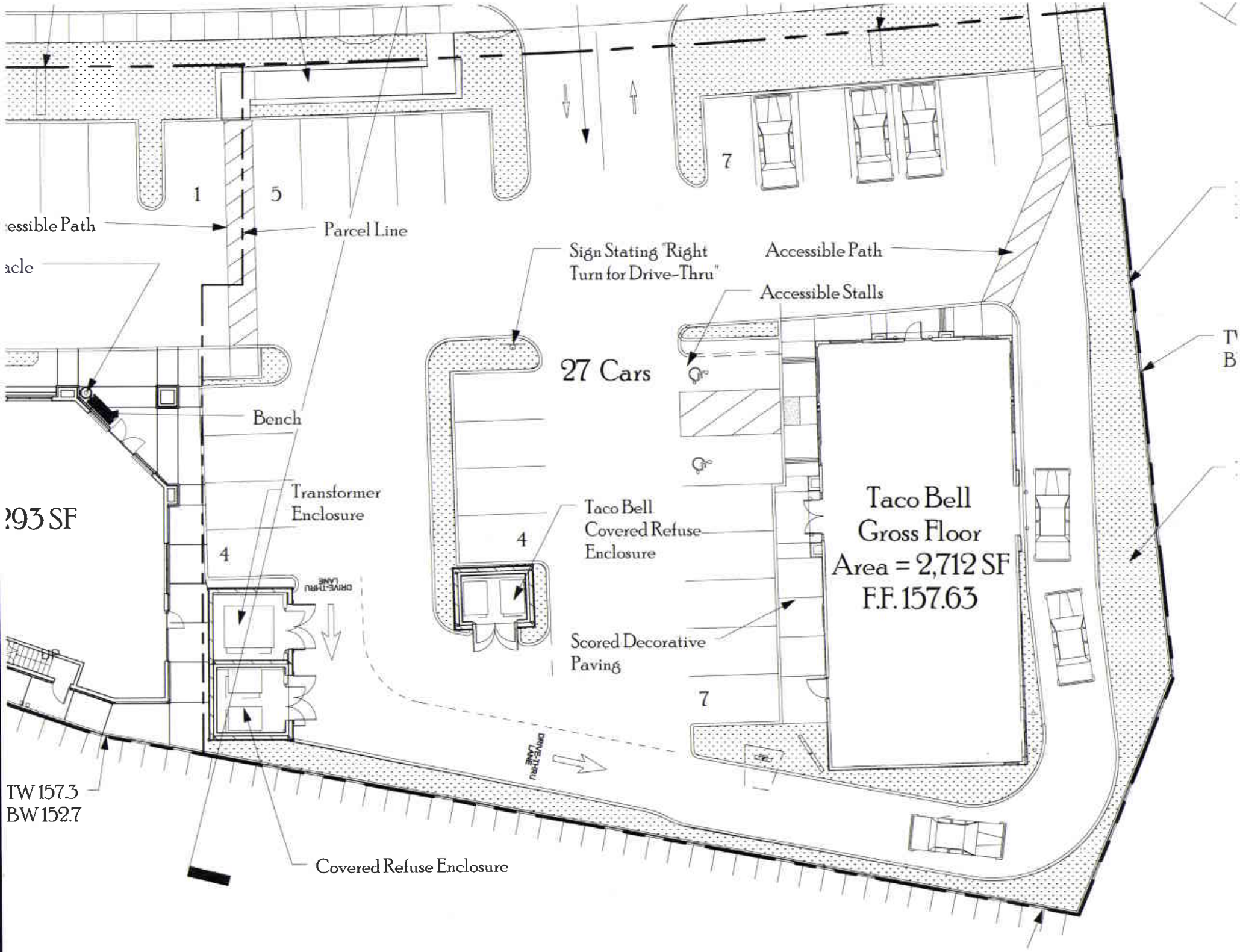
essible Path
acle
1
5
Parcel Line
Sign Stating "Right Turn for Drive-Thru"
Accessible Path
Accessible Stalls
7
27 Cars
Bench
Transformer Enclosure
293 SF
4
4
Taco Bell Covered Refuse Enclosure
Taco Bell Gross Floor Area = 2,712 SF F.F. 157.63
Scored Decorative Paving
7
DRIVE-THRU LANE
DRIVE-THRU LANE
UP
TW 157.3
BW 152.7
Covered Refuse Enclosure

ATTACHMENT D

CITY OF MARTINEZ
DESIGN REVIEW COMMITTEE
COMMENT FORM

PROJECT: Francis Plaza DATE: 9/13/12

REVIEW COMMENTS:

Return to DRB w/ following:
Coordinate site plans with Architect, Landscape and Engineer.
Address 2 ft overhang on parking – ADA path of travel, landscape etc.
Show lighting.
Delete Taco Bell monument sign, change South side.
Address West elevation on Francis Bldg.

DO YOU WISH TO SEE THIS PROJECT AGAIN AT DRC? ☒ YES ☐ NO

Address C3 w/ landscaping, address vines on trellisses, trash.
If possible add outdoor seating areas.

This project can be recommended for approval if the following conditions of approval are incorporated into the plans prior to Planning Commission hearing:

1. Show details for retaining walls, railings.
2. Show truck route for trash pick-up.
3.
4.
5. See back →

COMMITTEE MEMBER
Brian Kilian

10/25/12

I recommend approval with the following:

- Revise landscape to address conflict w/ trees in bio swale areas, and change shrubs under parking overhang.
- Add detail for vine screen specifically lower sections that provide support.
- Show revisions to monument sign - moved away from parking overhang. Maximum height not to exceed 7ft.
- Modify trash enclosure to match Francis Bldg.
- Architect represented details on windows, railings etc. that shall be shown on final drawings.

Brian Kilian

CITY OF MARTINEZ
DESIGN REVIEW COMMITTEE
COMMENT FORM

PROJECT: Francis Property

DATE: 9/13/2012

REVIEW COMMENTS:

① I would like to see a cupply Defernt design for the tace bell. ~~[illegible]~~ colors, Plaster, Top reem Color, Bell Top's, awning color, ex.....

② Would like to see the ~~front~~ Back of the Building look more like the front.

③ like to see more outside eating room out side of the Bakery / Smoothie

DO YOU WISH TO SEE THIS PROJECT AGAIN AT DRC? ☒ YES ☐ NO

This project can be recommended for approval if the following conditions of approval are incorporated into the plans prior to Planning Commission hearing: 10/25/2012 ok

1. WinDow's to Remain green
2. Awing to Remain green
3. store front to Remain green
4. lighting to Be look at By ~~[illegible]~~ Police Deprout
5. Taco Bell only open tell 2pm
6. Trash enclosure to mach main Bel Dwg Siding.

COMMITTEE MEMBER

Simon

CITY OF MARTINEZ
DESIGN REVIEW COMMITTEE
COMMENT FORM

PROJECT: Dr Francis Medical Bldg with Taco Bell DATE: 10/25/2012

REVIEW COMMENTS:

The owner + architects have done a nice job incorporating DRC recommendations and comments.

DO YOU WISH TO SEE THIS PROJECT AGAIN AT DRC? ☐ YES ☒ NO

This project can be recommended for approval if the following conditions of approval are incorporated into the plans prior to Planning Commission hearing:

1. Refuse, and transformer enclosure siding to match Dr. Francis Medical Bldg.
2. Verify external building lighting is adequate to minimize dark areas
3. that encourage loitering.
4. Move ladder on Taco Bell bldg to S.E. Side.
5. Verify drainage plan is adequate and will not cause flooding or building access issues
6. Incorporate proposed design changes to South facing wall of Medical Bldg.

COMMITTEE MEMBER

ATTACHMENT E
PROPOSED SIGNAGE 1124 ARNOLD

RECEIVED
JUL 12 2012
COMMUNITY DEV. DEPT.

Active Sign area: 23.6 Sq. Ft.

"FRANCIS DENTAL"
(MONUMENT FROM 2007 APPROVAL)

A- Manufacture and install one(1) Monument Display

½" = 1'

BLAIR SIGN PROGRAMS
2735 Via Orange Way
Studio 105
Spring Valley, CA 91978
blair@blairsign.net
Northern California:
(510) 337-9020
(510) 337-9029 fax
Southern California:
(619) 680-9166
(619) 680-9666 fax
Calif. License #677503

FRANCIS PLAZA

CLIENT
Johnson Lyman
Architect
PROJECT
Francis Plaza
ADDRESS
982 Center Ave.
Martinez, CA 94553

DATE	BY
12/05/06	Oscar Lemus

REVISIONS

A: 12/15/06	G
B: 01/10/07	H
C: 01/11/07	I
D: 01/15/07	J
E: 01/16/07	K
F: 03/06/07	L

© 2007 Blair Sign Programs

The colors printed on the document may vary from the colors specified.
It is important to note that the finished colors may vary from the specified colors.

Section I
Monument Display

Sheet # 1

APPROVALS:
BY CLIENT: _____ DATE _____
BY LANDLORD: _____ DATE _____

These plans are the exclusive property of BLAIR SIGN PROGRAMS and are the result of the original work of its employees. They are submitted to your company for the sole purpose of your consideration of whether to purchase these plans or to purchase from BLAIR SIGN PROGRAMS a product manufactured according to these plans. Distribution or exhibition of these plans to anyone other than employees of your company, or use of these plans to construct products similar to those embodied herein, is EXPRESSLY FORBIDDEN. In the event that such exhibition occurs, BLAIR SIGN PROGRAMS expects to be fully reimbursed for time and effort entailed in creating these plans.

5/5

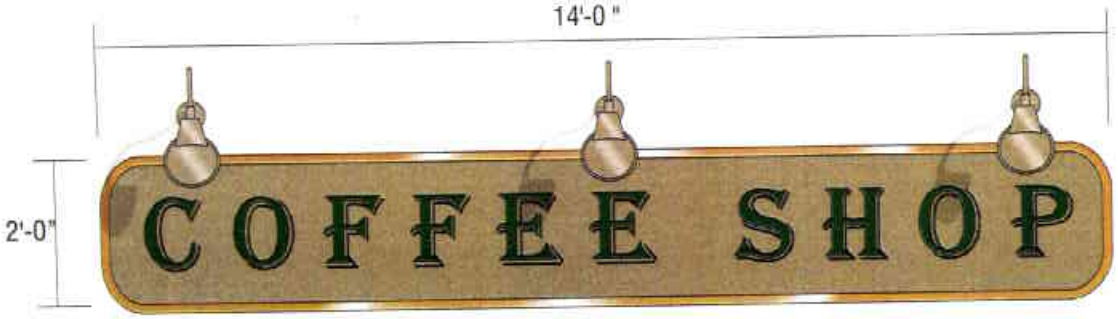

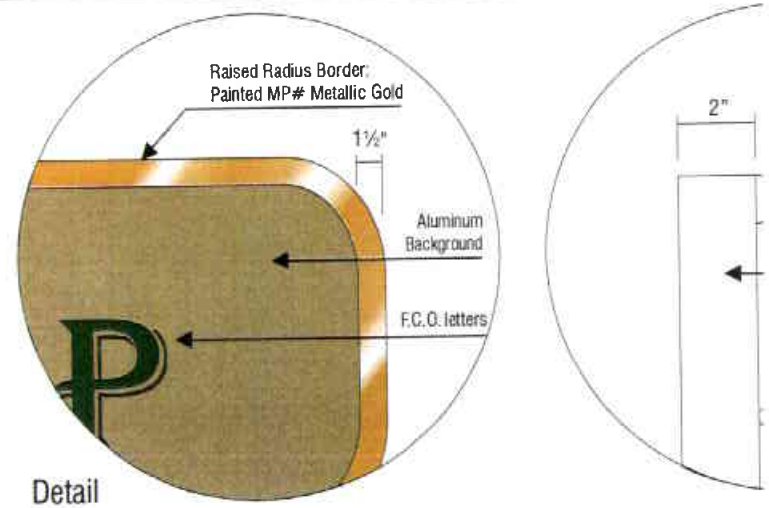

Detail

TS.1 to TS.4 **Typical Manufacture and Install One (1) Wall-Mounted Display** 3/8" = 1'-0"

Indirectly illuminated aluminum wall sign with .125" F.C.O. aluminum letters stud-mounted w/1/4" stand-offs

"FRANCIS DENTAL"
(SIGN PROGRAM FROM 2007 APPROVAL)

2/5

LARGE SWING BELL

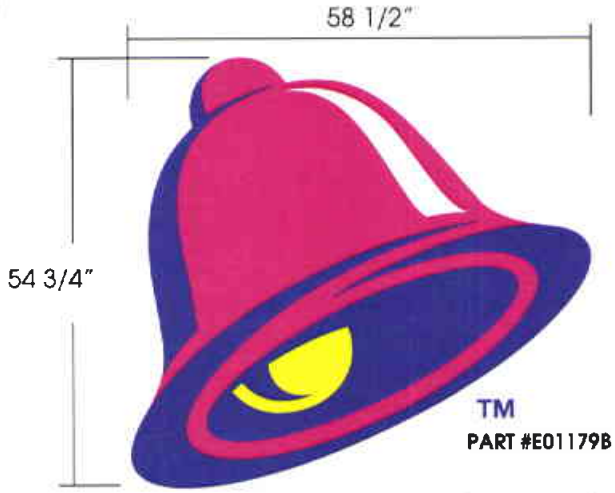

RECEIVED
JUL 12 2012
COMMUNITY DEV. DEPT.

SIGN SPECIFICATIONS

Materials
- Cabinet: .187 vacuum formed ABS w/ violet finish
- Face: .150 S/G Polycarbanate vacuum formed

Decoration
- Second surface decoration

Accesses
- Remove face

Area
- Squared: 22.24 Sq.Ft.
- Actual: 14.19 Sq.Ft.

Weight (Est.)
- 100 lbs.

Wind Load
- 110 MPH wind speed 3 second gust - exposure C. 300 PSF per foot of depth allowable lateral soil bearing pressure. Compliant with national building code and standards. (IBC, UBC, BOCA, AISC, ASCE 7, ACI, & Aluminum Design Manual).

ELECTRICAL SPECIFICATIONS

Lamps
- (3) F36T12 Design 50, (2) F42T12 Design 50 Fluorescent lamps

Ballast
- (1) EESB-832-16L ballast (1.7 amps)

Line Load
- 1.7 Amps @ 120 VAC
- (1) 20 Amp cicuit, 60 Hz UL 48 & NEC Compliant

COLOR SPECIFICATIONS

Interior: Paint white
Exterior: Paint violet
Graphic & Color Specifications

Color	PMS	3M
Yellow	109	VQ4077
Violet	Violet C	VQ 4153
Magenta	Process Magenta	VQ 4154

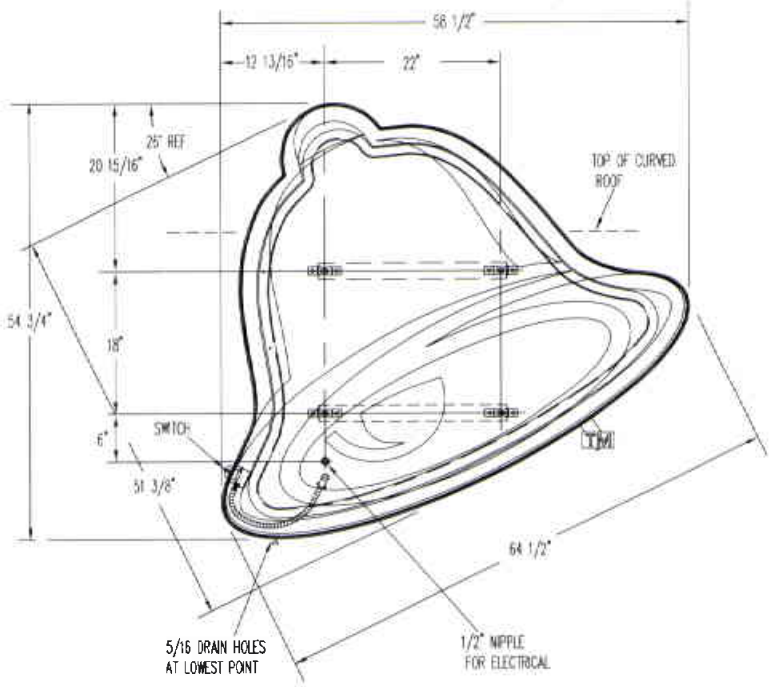

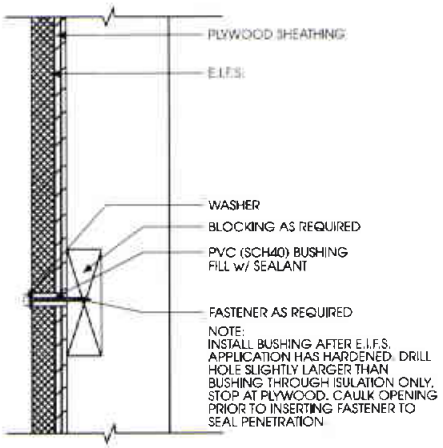

E.I.F.S. DETAIL

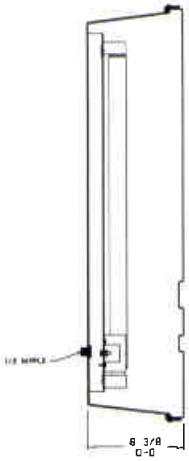

TYPICAL SECTION

3/15

Everbrite
Identity Systems Division
4949 S 110th St. • Greenfield, Wisconsin 53220 • Phone: 414-529-3500 • Fax: 877-430-7364 • www.everbrite.com rb Rev. 10/5/06

Yum! Brands.

4'-6" x 9'- 2" CANOPY

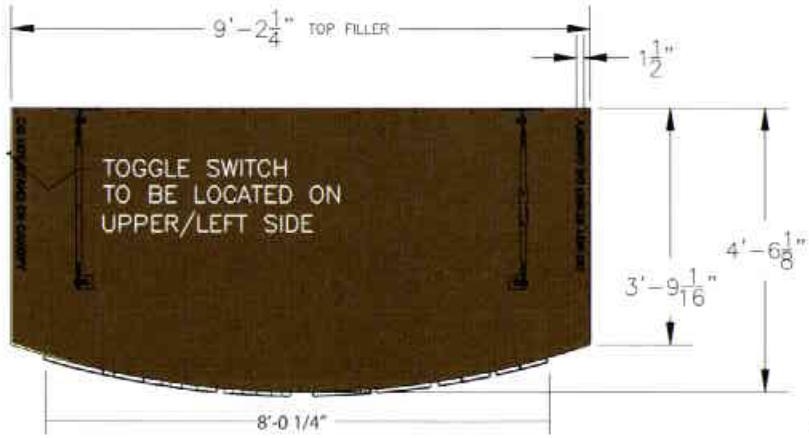

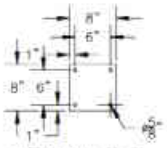

TURNBUCKLE PLATE
(2) 1/4" STEEL PLATES w/
(4/PLT) 1"ø WELDED PIPE SPACERS
ON BACK SIDE OF PLATE

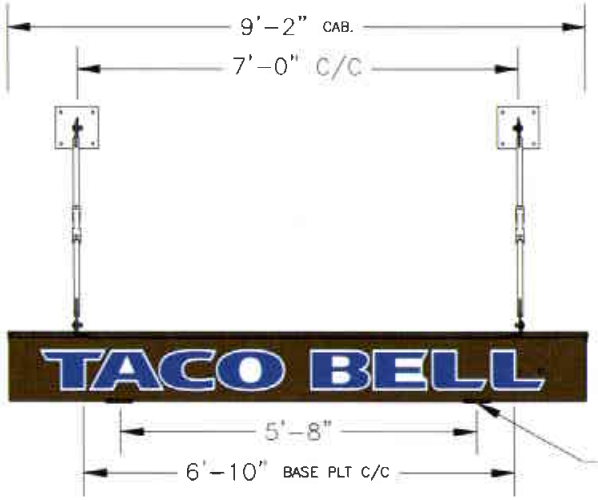

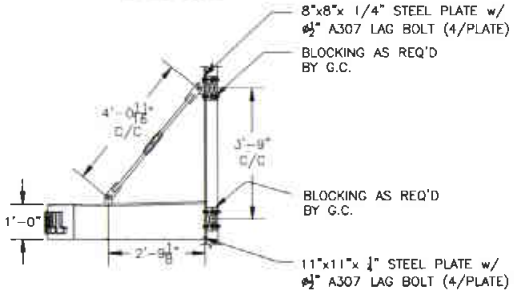

SIGN SPECIFICATIONS

Materials
- Canopy: Fabricated Aluminum
- Frame: Constructed Of Channel And Angle

Decoration
- Canopy: Painted Tiger Drylac Bronze Metalic #49-66230

Accesses
- Service Doors Located Bottom Side Of Canopy

Area
T.B.D.

Weight(Est.)
T.B.D.

Wind Load
- Wind Load Designed For 110 mph Wind Zone

PUSH-THRU LETTERS
Note: Centers of "A", "B", & "E" are opaque.

ELECTRICAL SPECIFICATIONS

DOWNLIGHTS
Illumination
- Incandescent Lamp & Fixture (2)

PUSH-THRU LETTERS
Illumination
- Fluorescent

COLOR SPECIFICATIONS

Graphic & Color Specifications
Color
Tiger Drylac Bronze Metallic

SEE FOLLOWING PAGES FOR DETAILS

PART # 823-DTCNPYW/PUSHLTRS

CUMMINGS SIGNS
The International Sign Service

THIS DESIGN REMAINS OUR EXCLUSIVE PROPERTY AND CANNOT BE DUPLICATED WITHOUT WRITTEN CONSENT

THIS IS AN ORIGINAL UNPUBLISHED DRAWING CREATED FOR YOUR PERSONAL USE IN CONNECTION WITH A PROJECT PLANNED FOR YOU BY CUMMINGS SIGNS. IT IS NOT TO BE SHOWN OUTSIDE YOUR ORGANIZATION NOR USED, REPRODUCED, COPIED, OR EXHIBITED IN ANY FASHION UNLESS AUTHORIZED IN WRITING BY AN OFFICER OF CUMMINGS SIGNS.

CUSTOMER APPROVAL:

DATE:

	DATE	BY
Rev. #1	3-8-2010	S.H.
Rev. #2	3-16-2010	S.H.
Rev. #3	4-21-2010	S.H.
Rev. #4	5-3-2010	S.H.
Rev. #5		
Rev. #6		

Yum! MultiBrand

DRAWING NO: 87533.03
DATE: 12-9-08
S. HAWKE

4/5

THIS IS AN ORIGINAL COPYRIGHT PROTECTED UNPUBLISHED DRAWING CREATED FOR YOUR PERSONAL USE IN CONNECTION WITH A PROJECT PLANNED FOR YOU BY CUMMINGS SIGNS. IT IS NOT TO BE SHOWN OUTSIDE YOUR ORGANIZATION NOR USED, REPRODUCED, COPIED, OR EXHIBITED IN ANY FASHION UNLESS AUTHORIZED IN WRITING BY AN OFFICER OF CUMMINGS SIGNS.

ECR	REV	REVISIONS	DATE	BY

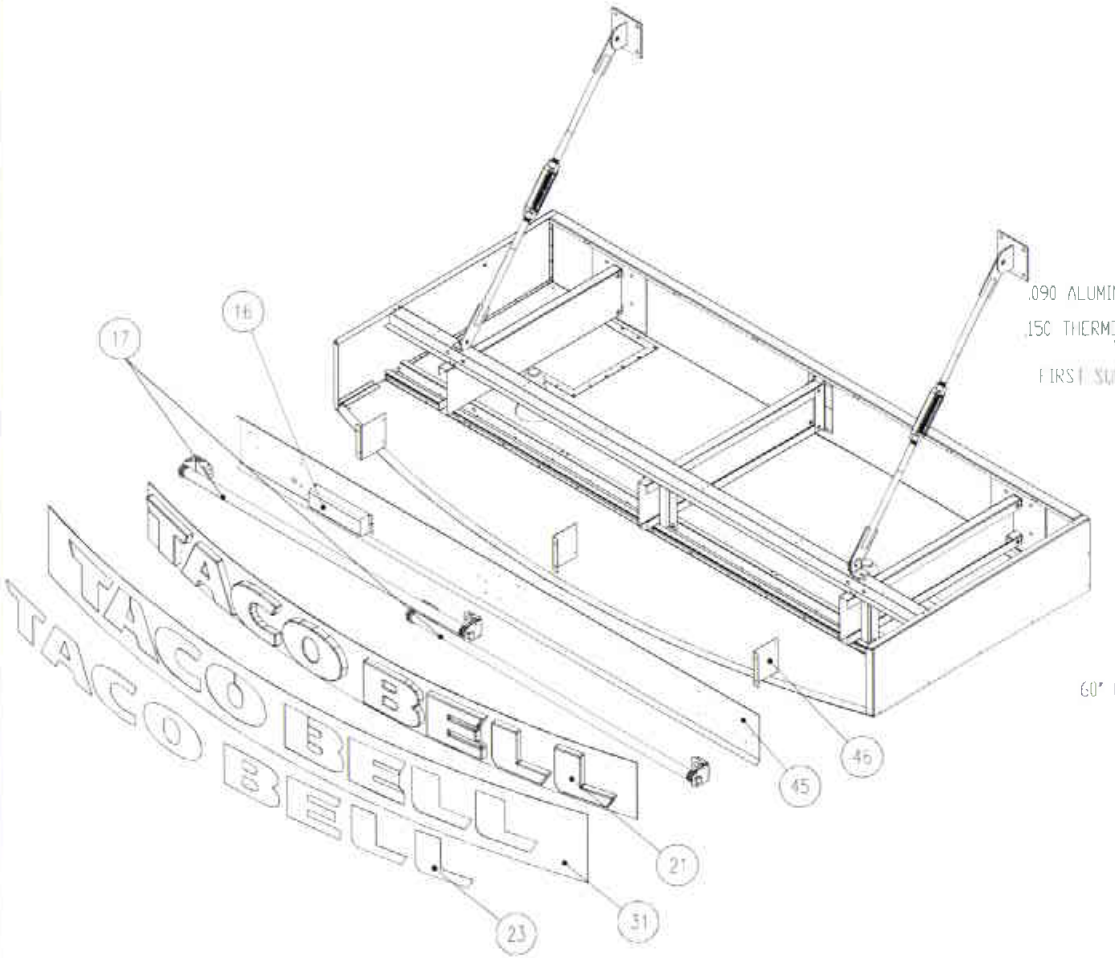

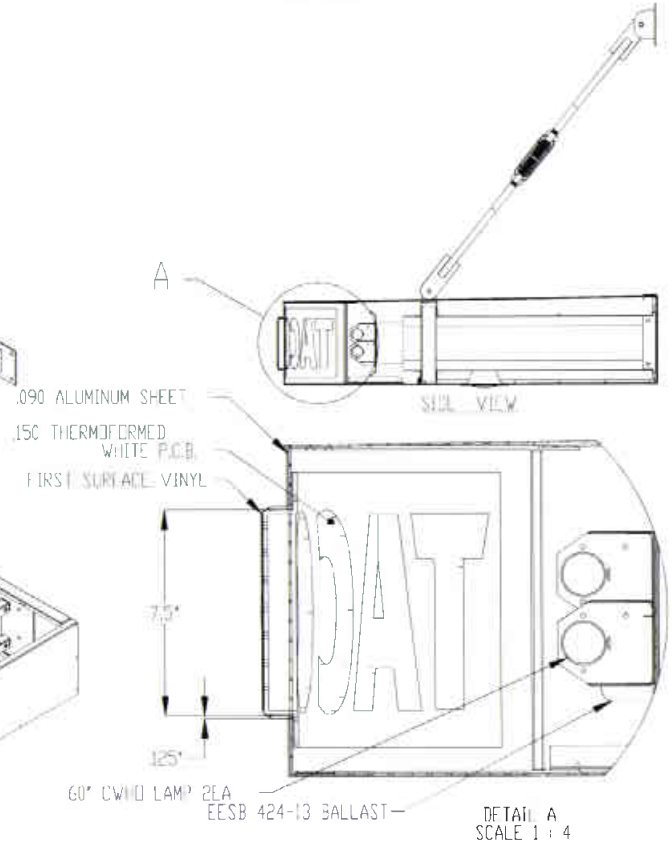

NOTES:

CUMMINGS SIGNS.

CUSTOMER	TACO BELL		
CODE	PAGE LAYOUT: ASSEMBLY		
ITEM DESCRIPTION	1'-0"x9'-2"x4'-6" CANOPY VALUE PACKAGE w/ 7.5" "TACO BELL" PUSH THRU FORMED LTRS		
LOCATION	VARIOUS	DRAWN BY	J. WATSON
SCALE	1:24	ENGINEER	J. WELLS
SHEET	2 OF 13	BOXED SQ FT	—
WIND LOAD (MPH)	—	EST WEIGHT (LBS)	500
ACCOUNT REPRESENTATIVE	CUMMINGS		
ITEM NUMBER	TB20782		
REV	—		

DRAWING APPROVED BY
PROGRAM APPROVED BY

PROTOTYPE	BY	—
Test RUN	BY	—
PRODUCTION 12/16/09	BY	—

ITEM NUMBER TB207802

54

THIS IS AN ORIGINAL COPYRIGHT PROTECTED UNPUBLISHED DRAWING CREATED FOR YOUR PERSONAL USE IN CONNECTION WITH A PROJECT PLANNED FOR YOU BY CUMMINGS SIGNS. IT IS NOT TO BE SHOWN OUTSIDE YOUR ORGANIZATION NOR USED, REPRODUCED, COPIED, OR EXHIBITED IN ANY FASHION UNLESS AUTHORIZED IN WRITING BY AN OFFICER OF CUMMINGS SIGNS.

ECR	REV	REVISIONS	DATE	BY

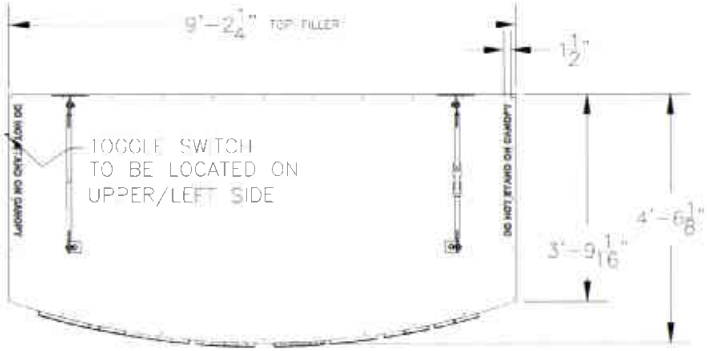

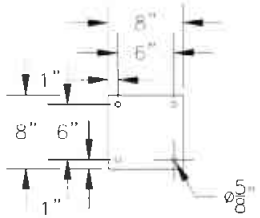

TURNBUCKLE PLATE
(2) 1/4" STEEL PLATES w/
(4/PLT) 1"ø WELDED PIPE SPACERS
ON BACK SIDE OF PLATE

*NOTE:
INSTALL TOGGLE SWITCH TO OPERATE (ON/OFF) IN THE HORIZONTAL POSITION

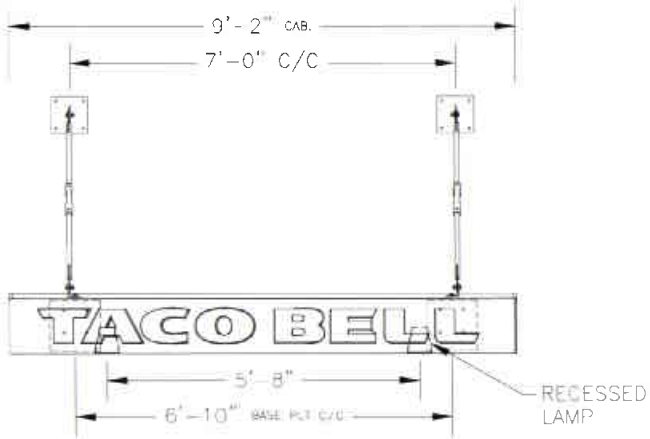

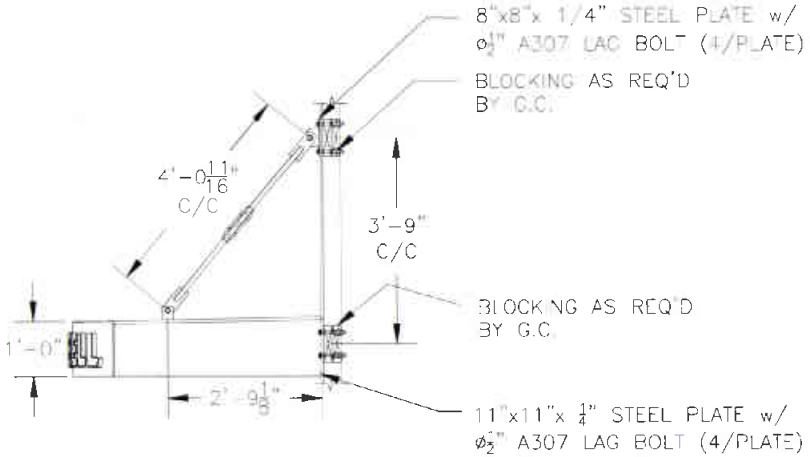

COLOR NOTE:
CANOPY AND TURNBUCKLES: ALL PARTS ARE PAINTED BRONZE TO MATCH TIGER DRYLAC
LETTER FACES: FORMED .093 7328 WHITE SG PCB w/
TACO BELL PURPLE VINYL 3M #V04153 (APPLIED FIRST SURFACE)
CENTERS OF A,B AND E ARE SOLID WITH WEEDED WHITE & OPAQUE VINYL SECOND SURFACE

ELECTRICAL NOTE:
TOTAL AMPS: 3.05
OF CKTS: 1 20 AMP REQUIRED
VOLTS: 120
THIS SIGN WILL BE U. LISTED AND IS INTENDED TO BE INSTALLED IN ACCORDANCE WITH THE REQUIREMENTS OF ARTICLE 600 OF THE NATIONAL ELECTRICAL CODE AND/OR OTHER APPLICABLE CODES. THIS INCLUDES PROPER GROUNDING AND BONDING OF THE SIGN.
**ø1/4" DRAINAGE/WEEP HOLES @ 4" ON CENTERS OR AS REQUIRED BY U.L.

NOTES:

CUMMINGS SIGNS.	CUSTOMER: TACO BELL		ITEM NUMBER: TB207801
	CODE	PAGE LAYOUT: ASSEMBLY	
	ITEM DESCRIPTION: 1'-0"x9'-2"x4'-6" CANOPY VALUE PACKAGE w/ 7.5" "TACO BELL" PUSH THRU FORMED LTRS		
DRAWING APPROVED / BY			
PROGRAM APPROVED / BY	LOCATION: VARIOUS	DRAWN BY: J. WATSON	
RELEASED FOR: PROTOTYPE / BY	SCALE: 1:24	ENGINEER: J. WELLS	ACCOUNT REPRESENTATIVE: CUMMINS
1st RUN / BY	SHEET: 1 OF 13	BOXED SQ FT	ITEM NUMBER: TB207801
PRODUCTION: 12/16/00 / BY	WIND LOAD (MPH)	TOT WEIGHT (LBS): 500	REV

64

1' x 14'-6" x 4'-0" CANOPY

W/O LETTERS

E003876B

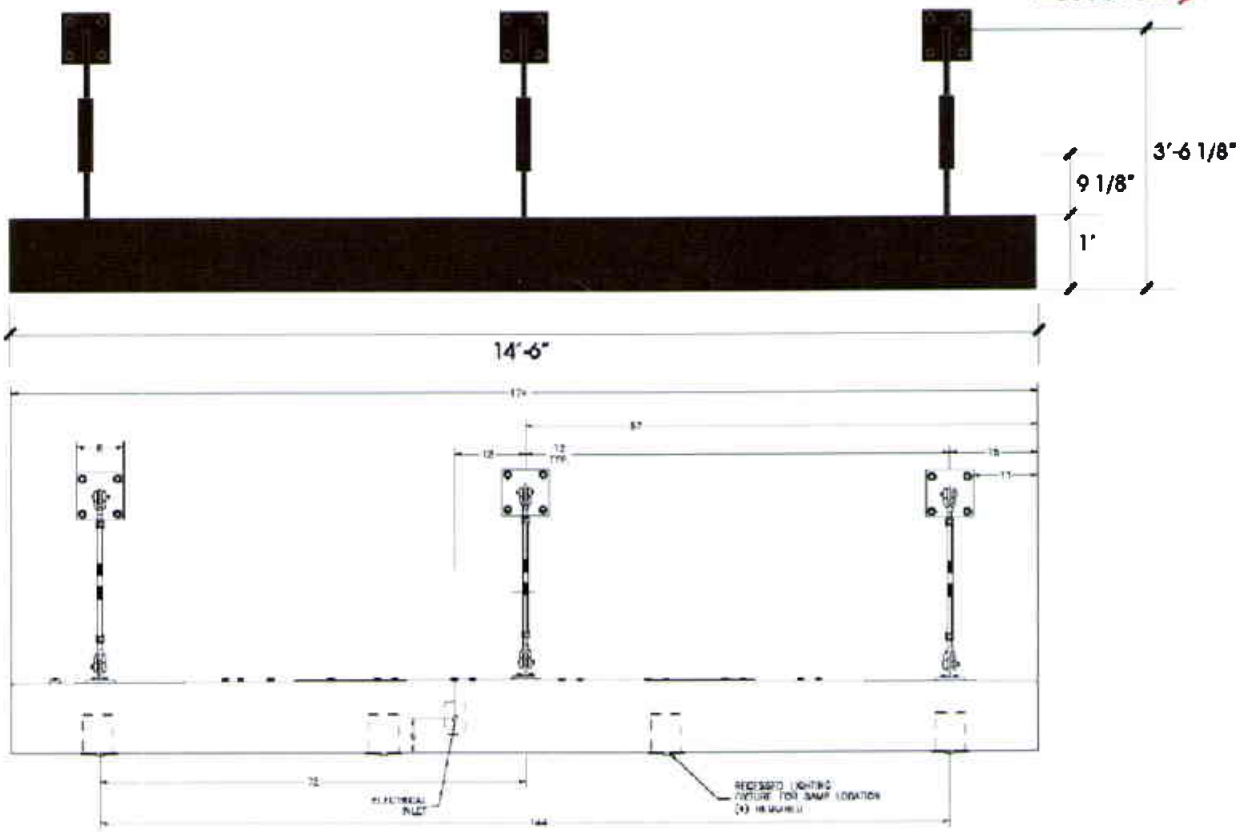

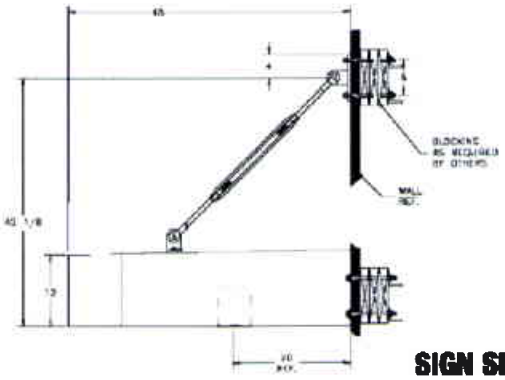

SIGN SPECIFICATIONS

Materials
Canopy
- Aluminum sheets

Decoration (Canopy)
- Painted Tiger Drylac 49/66230

Weight (Est.)
- 480 lbs.

Wind Load
- 110 MPH wind speed 3 second gust - exposure C. 300 PSF per foot of depth allowable lateral soil bearing pressure. Compliant with national building code and standards. (IBC, UBC, BOCA, AISC, ASCE 7, ACI, & Aluminum Design Manual).

COLOR SPECIFICATIONS

Canopy: Tiger Drylac 49/66230

Everbrite
4949 S 110th St. • Greenfield, Wisconsin 53220 • Phone: 414-529-3500 • Fax: 877-430-7364 • www.everbrite.com

rb 5/1

7/15

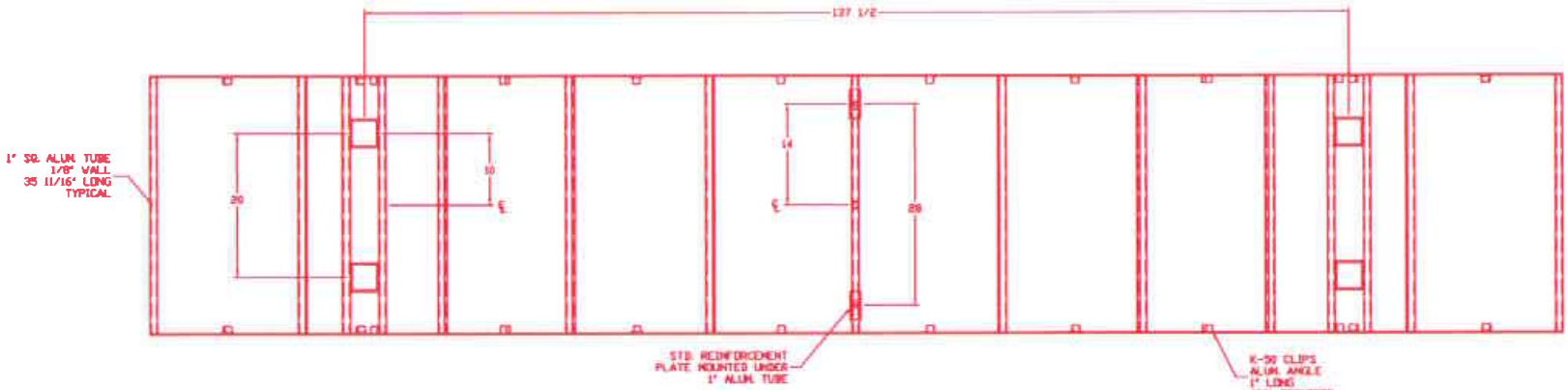

TOP VIEW

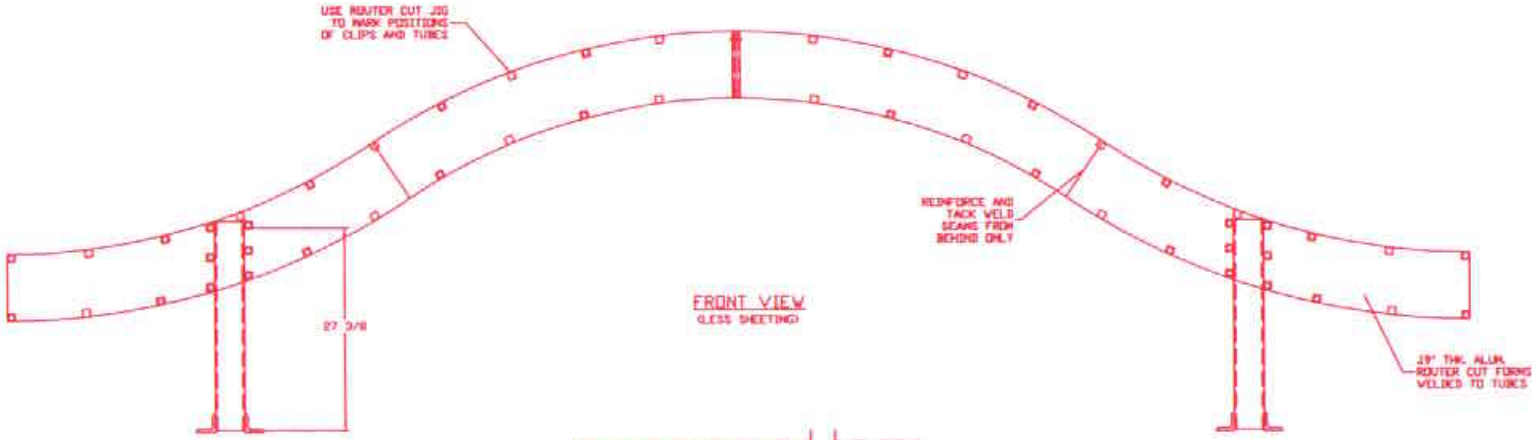

FRONT VIEW
(LESS SHEETING)

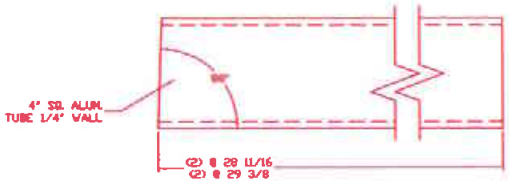

LEG DETAIL

A	RELEASED TO PRODUCTION	KB	10-23-06	KTP
SYM	DESCRIPTION	BY	DATE	CHK

REVISION RECORD

Everbrite

TITLE FLYING ARCH,TB 3' X 16'5" POST

DWN KB | DT 10-23-06 | SCALE N.T.S. | DRAWING E002281B | REV A

SHEET 1 OF 5

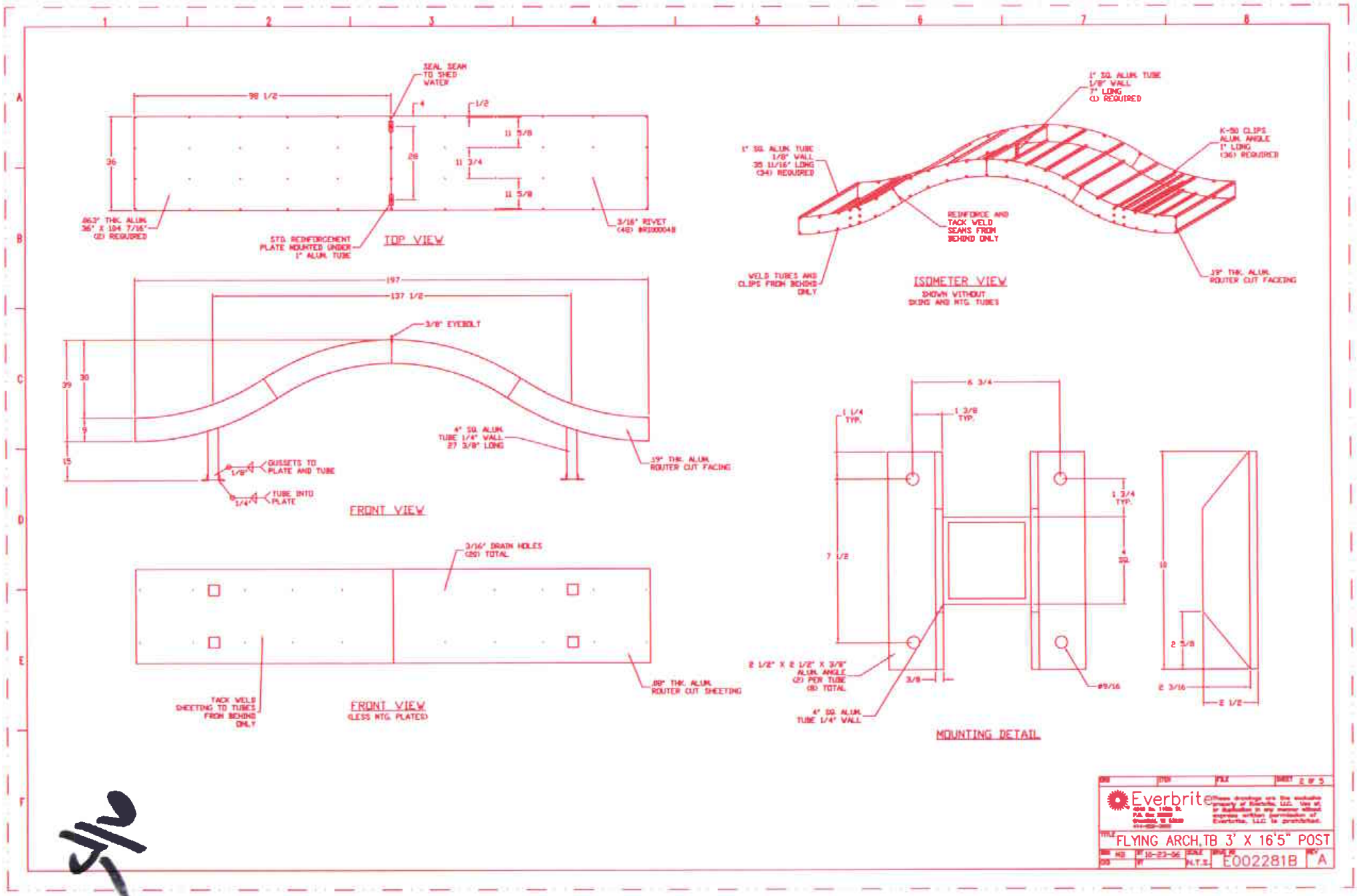

SEAL SEAM TO SHED WATER
98 1/2
4
1/2
11 5/8
11 3/4
11 5/8
36
28
.063" THK. ALUM. 36" X 104 7/16" (2) REQUIRED
STD. REINFORCEMENT PLATE MOUNTED UNDER 1" ALUM. TUBE
3/16" RIVET (48) #RD0004B
TOP VIEW
1" SQ. ALUM. TUBE 1/8" WALL 7" LONG (1) REQUIRED
K-50 CLIPS ALUM. ANGLE 1" LONG (36) REQUIRED
1" SQ. ALUM. TUBE 1/8" WALL 35 11/16" LONG (34) REQUIRED
REINFORCE AND TACK WELD SEAMS FROM BEHIND ONLY
WELD TUBES AND CLIPS FROM BEHIND ONLY
.19" THK. ALUM. ROUTER CUT FACEING
ISOMETER VIEW
SHOWN WITHOUT SKINS AND MTG. TUBES
197
137 1/2
3/8" EYEBOLT
39
30
9
15
4" SQ. ALUM. TUBE 1/4" WALL 27 3/8" LONG
.19" THK. ALUM. ROUTER CUT FACING
GUSSETS TO PLATE AND TUBE
1/8"
TUBE INTO PLATE
1/4"
FRONT VIEW
3/16" DRAIN HOLES (20) TOTAL
TACK WELD SHEETING TO TUBES FROM BEHIND ONLY
.08" THK. ALUM. ROUTER CUT SHEETING
FRONT VIEW
(LESS MTG. PLATES)
6 3/4
1 1/4 TYP.
1 3/8 TYP.
1 3/4 TYP.
7 1/2
4 SQ.
10
2 5/8
2 1/2" X 2 1/2" X 3/8" ALUM. ANGLE (2) PER TUBE (8) TOTAL
3/8
#9/16
2 3/16
2 1/2
4" SQ. ALUM. TUBE 1/4" WALL
MOUNTING DETAIL
Everbrite
FLYING ARCH,TB 3' X 16'5" POST
10-23-06
N.T.S.
E002281B
A

EVOLUTION DRIVE THRU MENU BOARD

PART#: E002142P

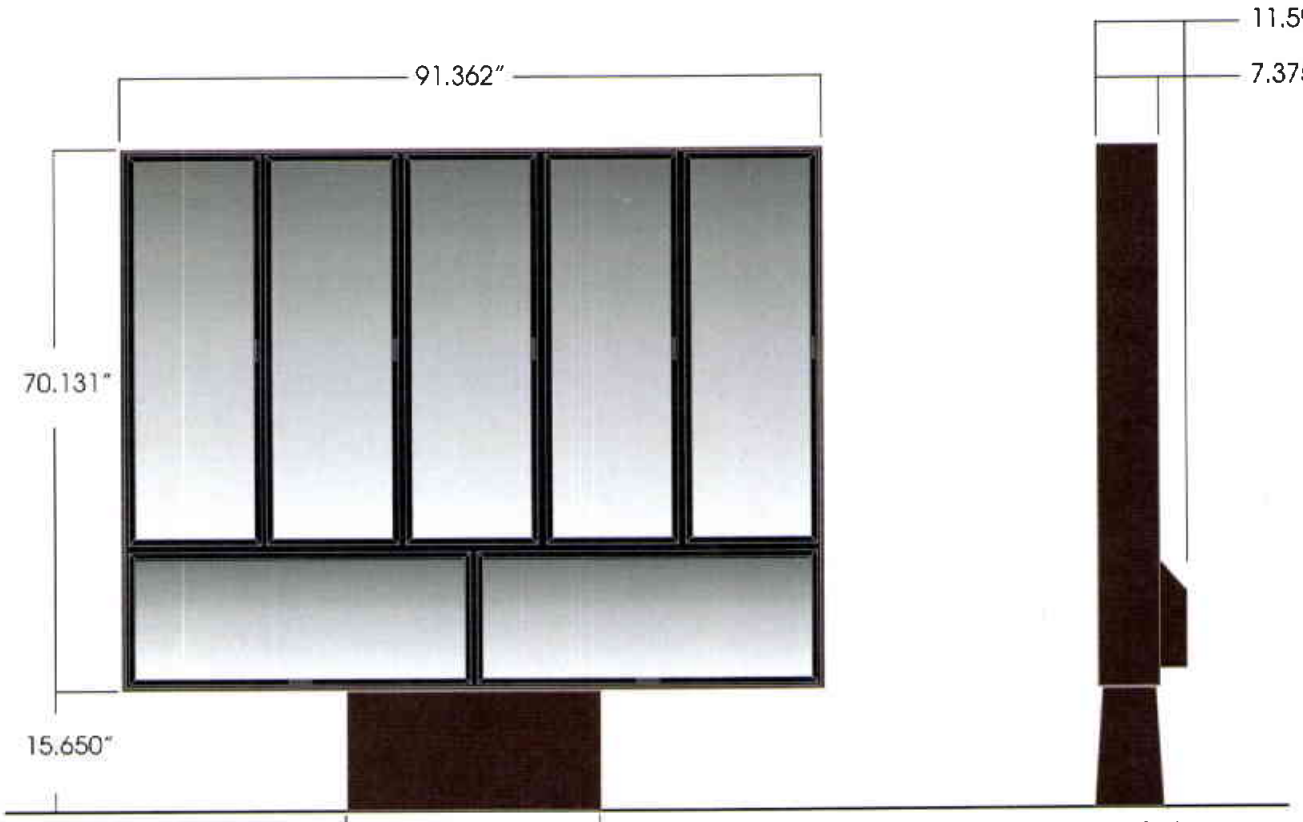

FRONT VIEW
SCALE: 1/2"=1'-0"

SIDE VIEW
SCALE: 1/2"=1'-0"

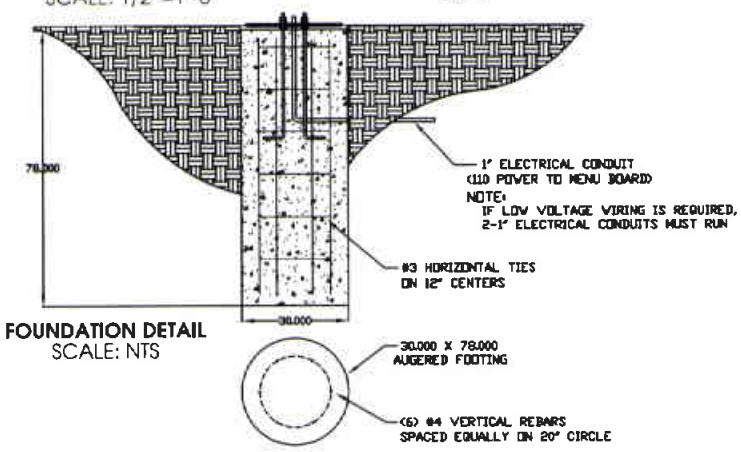

FOUNDATION DETAIL
SCALE: NTS

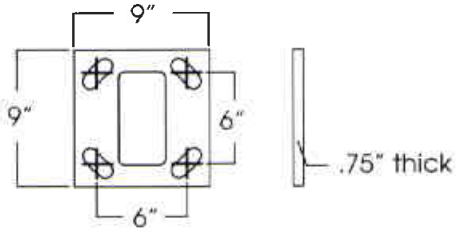

BASE PLATE DETAIL
SCALE: 1"=1'-0"

SIGN SPECIFICATIONS

Materials
- Cabinet: Extruded aluminum
- Face: .150 S/G Polycarbanate

Access
- Open doors & remove panels

Area
- Squared: 54.65 Sq.Ft.

Weight (Est.)
- 650 lbs. Crated

Wind Load
- 50 PSF, 150 MPH wind speed - exposure C.

ELECTRICAL SPECIFICATIONS

Lamps
- (4) F025/741 36" 4100K, (10) F032/741 48" 4100K

Ballast
- (7) Electronic ballasts @ .56 amps each

Line Load
- 3.92 Amps @ 120 VAC
- (1) 15 Amp cicuit, 60 Hz UL 48 & NEC Compliant

COLOR SPECIFICATIONS

Interior: Mill Finish
Exterior: Cabinet:Tiger Drylac 49/66230-33 Bronze
Doors & Mullions: Black
Graphic & Color Specifications:
Tiger Drylac 49/66230-33 Bronze

14/15

DISCLAIMER: Renderings are for graphic purposes only and not intended for actual construction dimensions. For windload requirements, actual dimensions and mounting detail, please refer to engineering specifications & install drawings.

235729

Everbrite
Identity Systems Division
4949 S 110th St. • Greenfield, Wisconsin 53220 • Phone: 414-529-3500 • Fax: 877-430-7364 • www.everbrite.com

rb 11/7/07

HYPERACTIVE TECHNOLOGIES

Dealer Login

Delivering Operational Excellence to Your QSR

HYPERVIEW®

An order confirmation system increases speed-of-service, improves order accuracy, and drives your sales up. You need an order confirmation system, and one literally shines brighter than the rest: HyperView® from HyperActive Technologies. HyperView gives your customers a better look at what you have to offer, giving you a better chance to increase sales. Here's why:

HYPERVIEW IS HYPER-VISIBLE

HyperView's LCD with white LED backlighting puts you in the best light. Our optical bonding of the cover glass to the LCD panel virtually eliminates all reflections. Customers see crisp, clear images in a bright display, improving order accuracy. With our split-screen configurable technology, you can continue to up-sell, even when the order is displayed. HyperView's "drag-and-drop" Content Editor lets you make upgrades and image changes easily from a single location.

HYPERVIEW IS HYPER-DURABLE AND GREEN

HyperView is designed for the long run – it's NEMA 4 CERTIFIED. The processor remains in the store, protected from heat and cold. It's environmentally sound, mercury-free display lasts for more than 10 years and there's a LIFETIME WARRANTY on the seal. It operates in temperatures from -40°F to +176°F without cooling fans or heaters.

SUPPORT THAT OUTSHINES THE COMPETITION

HyperActive's Customer Support Team is comprised of dedicated professionals focused on providing you with world-class service.

BRIGHTEN YOUR PROFIT PICTURE WITH HYPERVIEW

It's simple: when you reduce ordering errors and cut the time your customers spend in line, you increase customer satisfaction. More satisfied customers lead to more customer visits and more sales. And that leads directly to a better bottom line.

With all of this outstanding value, and LOWEST COST OF OWNERSHIP , it's no wonder that HyperView is quickly becoming one of the brightest stars in the QSR industry.

<>

HYPERVIEW PRINTABLE PDFS

- HyperView Ad
- HyperView Advantages
- HyperView Standard Pedestal
- HyperView Model 07 Specifications
- HyperView Model 08 Specifications

CHECK OUT OUR CASE STUDIES OF CLIENTS SUCCESS

- Boddie-Noell
- Popeyes
- Frisch's Big Boy

- Click here for Leasing Options

HYPERVIEW PPT SLIDESHOW

- HyperView.pps

Yum! Brands.

EVOLUTION ORDER POINT CANOPY - CUSTOM

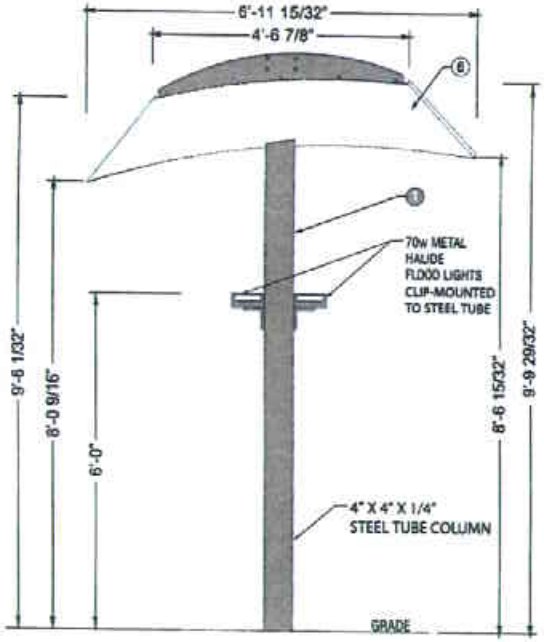

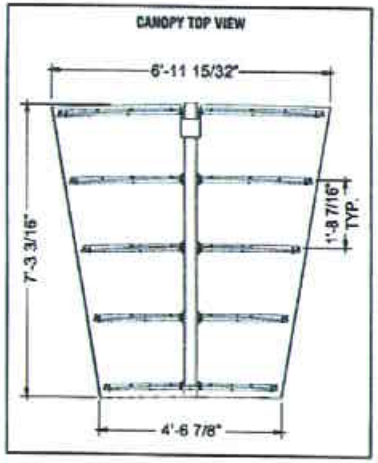

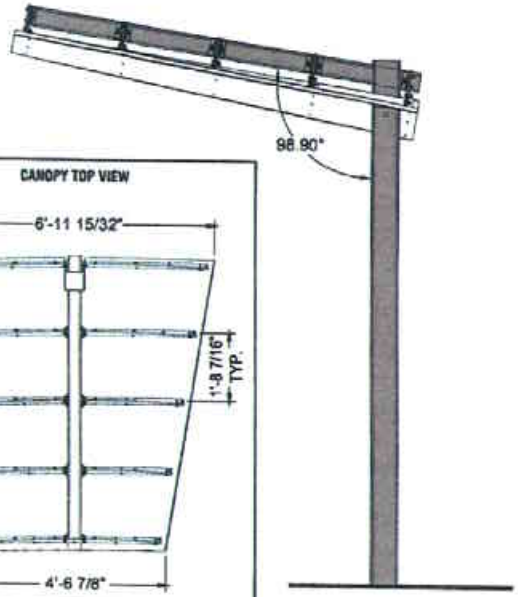

SPECIFICATIONS

6"x6"x1/4" Steel tube column

4"x4"x1/4" Steel tube horizontal canopy support

.063 Aluminum canopy deck

**Optional fabric canopy top also available

1/4" Steel rib plates - rafters

COLOR SPECIFIC

1. TB Bronze Tiger Drylac 49-66230 C33
2. White Matte

823-EVO-CANOPY-VE

1 REQUIRED

CUMMINGS SIGNS. The International Sign Service

THIS IS AN ORIGINAL UNPUBLISHED DRAWING CREATED FOR YOUR PERSONAL USE IN CONNECTION WITH A PROJECT PLANNED FOR YOU BY CUMMINGS SIGNS. IT IS NOT TO BE SHOWN OUTSIDE YOUR ORGANIZATION NOR USED, REPRODUCED, COPIED, OR EXHIBITED IN ANY FASHION UNLESS AUTHORIZED IN WRITING BY AN OFFICER OF CUMMINGS SIGNS.

CUSTOMER APPROVAL: _____

DATE: _____

	DATE	BY		DATE	BY
Rev. #1			Rev. #4		
Rev. #2			Rev. #5		
Rev. #3			Rev. #6		

TACO BELL

DRAWING NO: 67187F

DATE: 11-3-20101

S. Hawke

1/21

TRELLIS 7' x 3'

PART#: E002083P

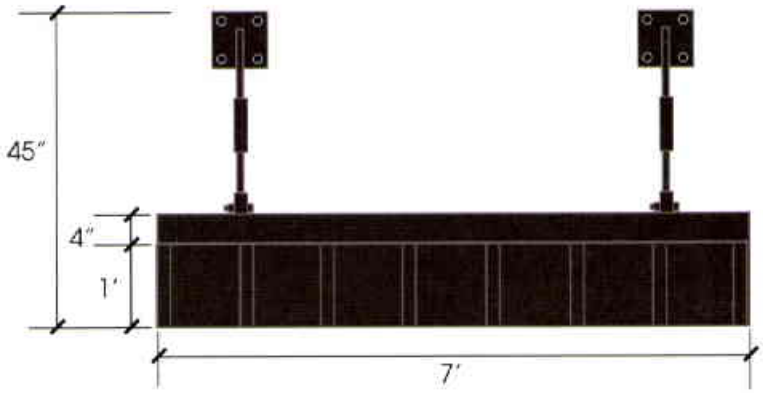

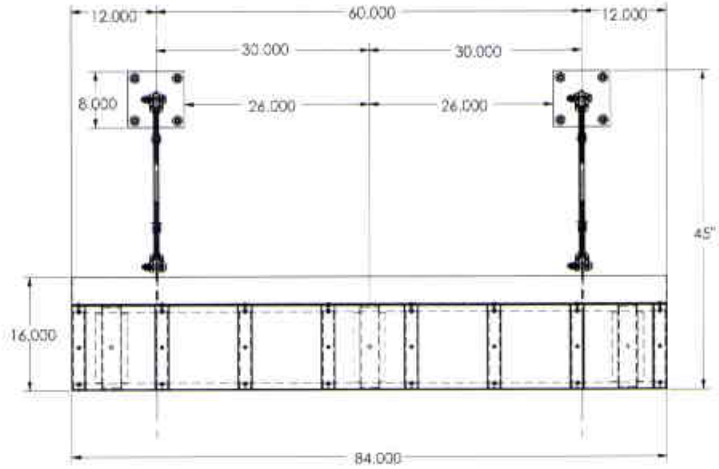

FRONT VIEW

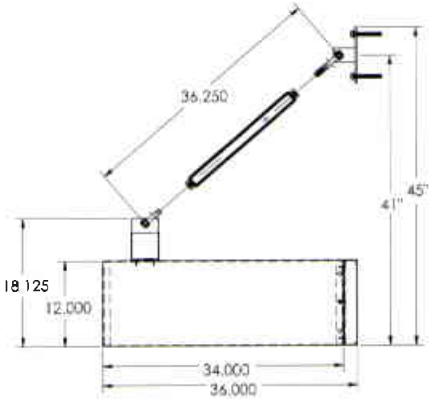

SIDE VIEW

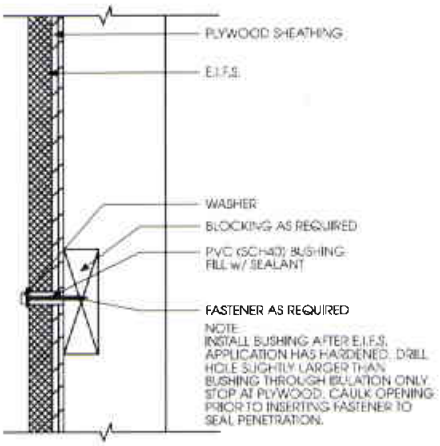

E.I.F.S. DETAIL

SIGN SPECIFICATIONS

Materials

Canopy

- Aluminum tube
- 3/4" Dia. steel rod turnbuckle

Decoration

- Painted

Area

- Actual: 21 Sq.Ft. (Wall Footprint)

Weight (Est.)

- 187 lbs. Crated, 133 lbs. Uncrated

Wind Load

- Maximoum design wind load; 35 psf, 110 mph wind speed 3-second gust-exposure C.

COLOR SPECIFICATIONS

Canopy Structure: Tiger Drylac Metallic Bronze 49/66230

13/15

Everbrite Identity Systems Division 4949 S 110th St. • Greenfield, Wisconsin 53220 • Phone: 414-529-3500 • Fax: 877-430-7364 • www.everbrite.com

228388-3

rb 2/20/07

TRELLIS 17' x 3'

PART#: E002086P

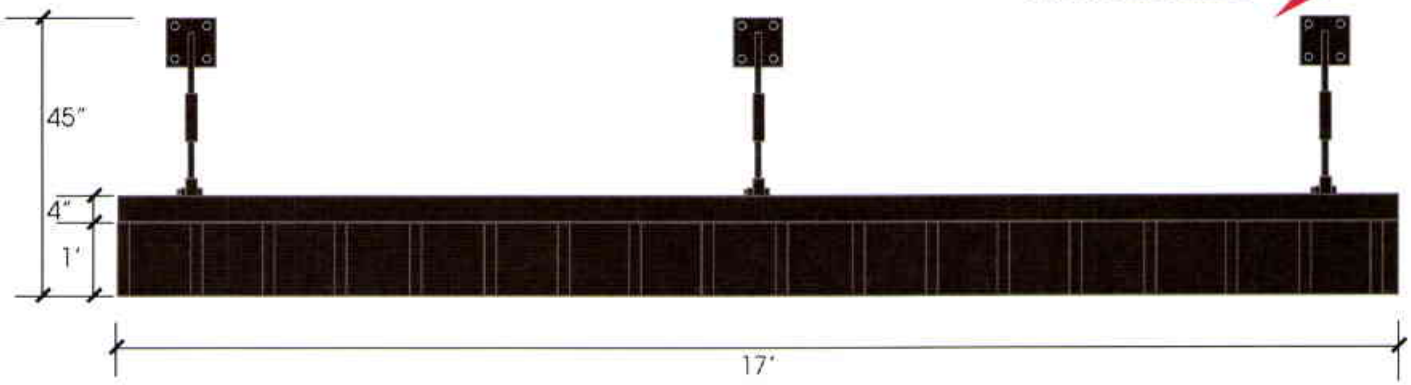

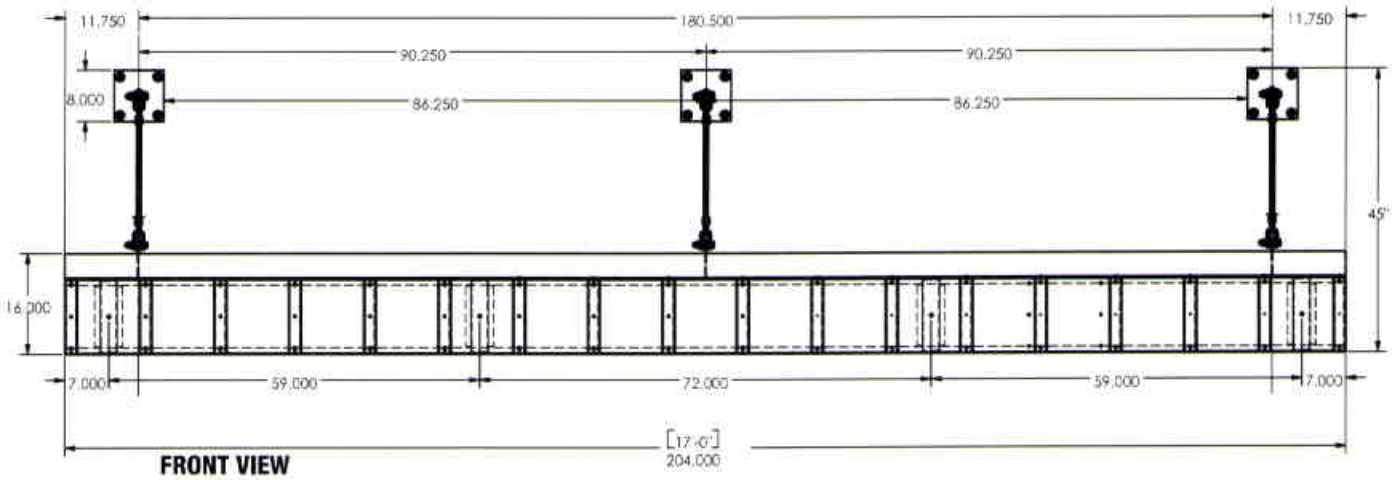

FRONT VIEW

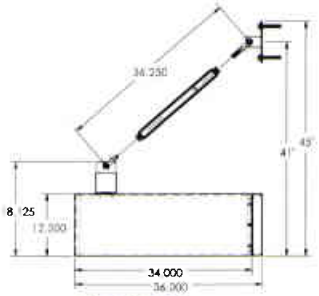

SIDE VIEW

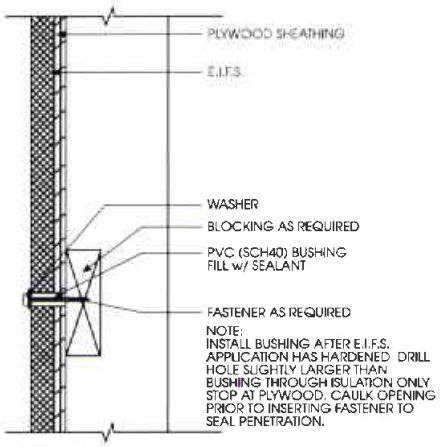

E.I.F.S. DETAIL

SIGN SPECIFICATIONS

Materials

Canopy
- Aluminum tube
- 3/4" Dia. steel rod turnbuckle

Decoration
- Painted

Area
- Actual: 51 Sq.Ft. (Wall Footprint)

Weight (Est.)
- 375 lbs. Crated, 305 lbs. Uncrated

Wind Load
- Maximoum design wind load; 35 psf, 110 mph wind speed 3-second gust-exposure C.

COLOR SPECIFICATIONS

Canopy Structure: Tiger Drylac Metallic Bronze 49/66230

14/15

TRELLIS CURVED 6' x 2'

PART#: E002091P

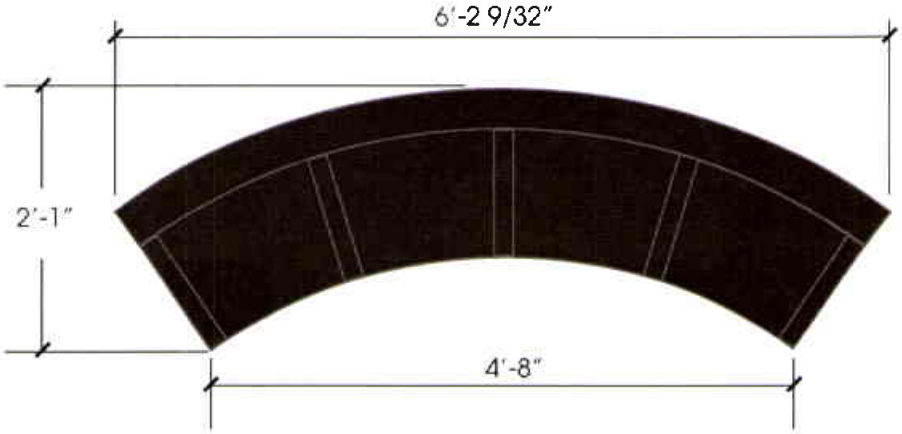

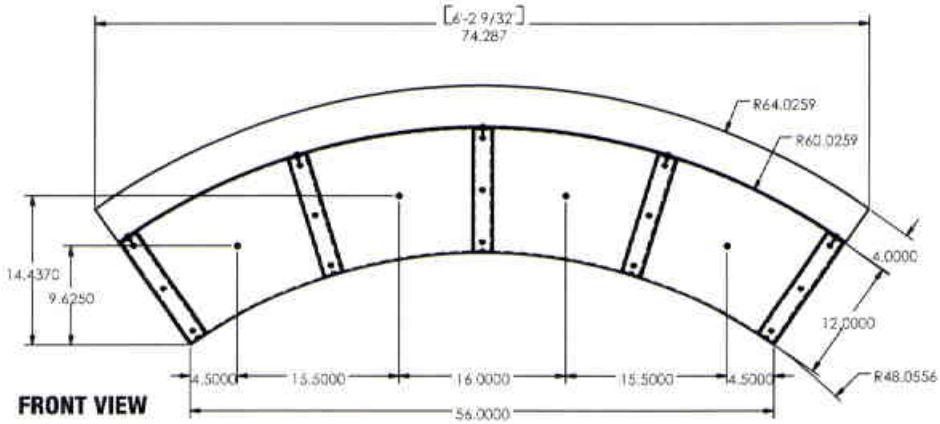

FRONT VIEW

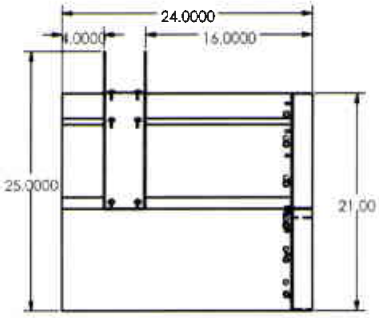

SIDE VIEW

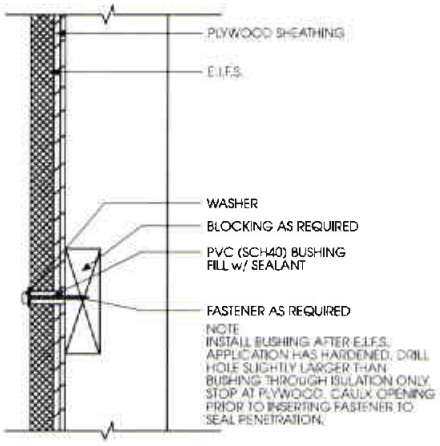

E.I.F.S. DETAIL

SIGN SPECIFICATIONS

Materials

Canopy

- Aluminum tube

Decoration

- Painted

Area

- Actual: 18 Sq.Ft. (Wall Footprint)

Weight (Est.)

- 116 lbs. Crated, 71 lbs. Uncrated

Wind Load

- Maximoum design wind load; 35 psf, 110 mph wind speed 3-second gust-exposure C.

COLOR SPECIFICATIONS

Canopy Structure: Tiger Drylac Metallic Bronze 49/66230

15/15

228388-3

Everbrite Identity Systems Division 4949 S 110th St. • Greenfield, Wisconsin 53220 • Phone: 414-529-3500 • Fax: 877-430-7364 • www.everbrite.com

rb 2/27/07

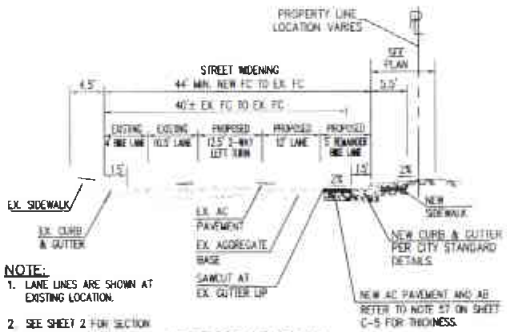

NOTE:
1. LANE LINES ARE SHOWN AT EXISTING LOCATION.
2. SEE SHEET 2 FOR SECTION LOCATION IN PLAN.

ARNOLD DRIVE
TYPICAL STREET SECTION D-D

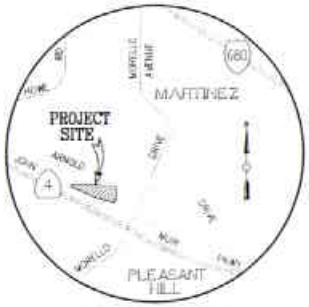

VICINITY MAP
NOT TO SCALE

GENERAL NOTES:

1. OWNER: FRANCIS PLAZA, LLC
   582 CENTER AVENUE
   MARTINEZ, CA 94553
   (925) 372-4747
2. ENGINEER/SURVEYOR: LUK AND ASSOCIATES
   738 ALFRED NOBEL DRIVE
   HERCULES, CA 94547
   JACKIE LUK LS 8934
   JACKIE LUK RCE 75724
3. ASSESSOR'S PARCEL NO.: 377-112-022
4. TOTAL AREA: 46,922.75 SQ. FT.
5. ZONING: CURRENT ZONING: COMMERCIAL
   PROPOSED ZONE: COMMERCIAL
   PROPOSED NUMBER OF 2 PARCELS:
6. LAND USE: EXISTING: VACANT
   PROPOSE: COMMERCIAL
7. LOT SIZE: PARCEL A: 23,191.11 SQ. FT.
   PARCEL B: 22,731.64 SQ. FT.
8. UTILITY JURIDICTIONS/PROVIDERS ARE AS FOLLOWS:

STORM DRAINS:	CITY OF MARTINEZ
SANITARY SEWER:	MT. VIEW SANITARY DISTRICT
WATER:	CONTRA COSTA WATER DISTRICT
ELECTRICITY:	PACIFIC GAS & ELECTRIC COMPANY
NATURAL GAS:	PACIFIC GAS & ELECTRIC COMPANY
TELEPHONE:	AT&T

9. CONTOUR INTERVAL: EXISTING: 2 FEET
10. THE ADDRESSES OF THE SUBJECT PROPERTY ARE:
    1124 ARNOLD DRIVE, MARTINEZ, CALIFORNIA 94553
11. PROPOSED GRADES ARE PRELIMINARY, FINAL GRADES ARE SUBJECT TO FINAL DESIGN. REFER TO GML DRAWING SHEET C-4.1 AND C-4.2 FOR PROPOSED GRADING.
12. BOUNDARY COMPILED FROM RECORD INFORMATION AND DOES REPRESENT FIELD SURVEY OF PROPERTY.
13. ALL UTILITY LINES LOCATED OUTSIDE OF RIGHT-OF-WAY WILL BE WITHIN AN EASEMENT AND DEDICATED TO UTILITY AGENCIES ON FINAL DESIGN.
14. THE ACCESS AND UTILITY EASEMENTS WILL BE SHOWN ON THE PROJECT CC&R.
15. ABUTTER'S RIGHT OF ACCESS TO BE RELINQUISHED ON ARNOLD DRIVE EXCEPT FOR THE PROPOSED DRIVEWAYS AND ACCESS RAMPS TO SIDEWALK.

BENCHMARK
SET "MAGNAIL" AS SHOWN ELEVATION=158.67, VERTICAL DATUM: N.A.V.D. 88 ESTABLISHED BY GPS SURVEY. NAD83 EPOCH 2002, ITRF EPOCH:20055091
THIS ELEVATION DATUM IS UN-RELATED TO CONTRA COSTA COUNTY DATUM.

TENTATIVE MAP
MINOR SUBDIVISION #551-12

BEING PORTION OF PARCEL A AND B PARCEL MAP FILED APRIL 23, 1971 IN BOOK 16 PAGE 23. ALSO AS DESCRIBED IN THAT NOTICE OF MERGER, MERGER NO. LM 07-04 RECORDED JULY 22, 2008 AS INSTRUMENT NO. 2008-162410, OFFICIAL RECORDS OF CONTRA COSTA COUNTY

CITY OF MARTINEZ, CONTRA COSTA COUNTY, CALIFORNIA

SHEET 1 SCALE: 1" = 20' NOVEMBER 2012

PREPARED BY
LUK & ASSOCIATES
CIVIL ENGINEERS · LAND PLANNERS · LAND SURVEYORS
738 ALFRED NOBEL DRIVE
HERCULES, CALIFORNIA 94547 (510) 724-3388

JACQUELINE LUK P.L.S. 8934
LICENSE EXPIRES: 9/30/2014

DATE: _____

PROFESSIONAL LAND SURVEYOR JACQUELINE LINDRE LUK LS 8934 STATE OF CALIFORNIA

Attachment 11

TENTATIVE MAP

MINOR SUBDIVISION #551-12

BEING PORTION OF PARCEL A AND B PARCEL MAP FILED APRIL 23, 1971 IN BOOK 16 PAGE 23. ALSO AS DESCRIBED IN THAT NOTICE OF MERGER, MERGER NO. LM 07-04 RECORDED JULY 22, 2008 AS INSTRUMENT NO. 2008-162410, OFFICIAL RECORDS OF CONTRA COSTA COUNTY

CITY OF MARTINEZ, CONTRA COSTA COUNTY, CALIFORNIA

SHEET 1 SCALE: 1" = 20' NOVEMBER 2012

PREPARED BY
LUK & ASSOCIATES
CIVIL ENGINEERS - LAND PLANNERS - LAND SURVEYORS
738 ALFRED NOBEL DRIVE
HERCULES, CALIFORNIA 94547 (510) 724-3388

F:\JOBS\FILE2006\26.71-20\TENTATIVEMAP/TENTATIVEMAP.dwg

SHEET 2 OF 2
JOB NO: 26071-20
PLOT DATE: NOVEMBER 15, 2012